ENGINE COOLING

CONTENTS

GENERAL INFORMATION 2
SERVICE SPECIFICATIONS 2
LUBRICANT 2
SEALANTS 3
SPECIAL TOOL 3
TROUBLESHOOTING 3
ON-VEHICLE SERVICE 8
Engine Coolant Leak Checking 8
Radiator Cap Valve Opening Pressure Check ... 8
Engine Coolant Replacement 9
Concentration Measurement 10
Fan Controller Check 10
Fan Control Relay Continuity Check 11
THERMOSTAT 12
WATER PUMP 14
WATER HOSE AND WATER PIPE 16
RADIATOR 19

GENERAL INFORMATION

The cooling system is designed to keep every part of the engine at appropriate temperature in whatever condition the engine may be operated. The cooling method is of the water-cooled, pressure forced circulation type in which the water pump pressurizes coolant and circulates it throughout the engine. If the coolant temperature exceeds the prescribed temperature, the thermostat opens to circulate the coolant through the radiator as well so that the heat absorbed by the coolant may be radiated into the air.

The water pump is of the centrifugal type and is driven by the timing belt <4G9> or drive belt <4G1> from the crankshaft.
The radiator is the corrugated fin, down flow type and is cooled by the electrical radiator fan.
The cooling fans are controlled by a fan controller and the engine-ECU depending on driving conditions.

Items					Specifications
Radiator	Performance kJ/h	GDI	M/T		152,791
			A/T		169,535
		MPI	Except for GCC	M/T	152,791, 194,651*
				A/T	169,535, 194,651*
			GCC		194,651
A/T oil cooler	Performance kJ/h				5,652

NOTE
*: Vehicles with optional radiator

SERVICE SPECIFICATIONS

Items			Standard value	Limit
Radiator cap opening pressure kPa			74 – 103	64
Range of coolant antifreeze concentration of radiator %			30 – 60	–
Thermostat	Valve opening temperature of thermostat °C	4G9	85 ± 1.5	–
		4G1	88 ± 1.5	–
	Full-opening temperature of thermostat °C	4G9	98	–
		4G1	100	–
	Valve lift (at 95°C) mm	4G9	8.5 or more	–
		4G1	8.0 or more	–

LUBRICANT

Items	Quantity ℓ
MITSUBISHI GENUINE COOLANT or equivalent	6

SEALANTS

Items	Specified sealant	Remarks
Cylinder block drain plug	3M Nut Locking Part No. 4171 or equivalent	Drying sealant
Water pump	Mitsubishi Genuine Parts No. MD970389 or equivalent	Semi-drying sealant
Water fitting <4G9>		
Water outlet fitting <4G9>		
Water by-pass fitting		

SPECIAL TOOL

Tool	Number	Name	Use
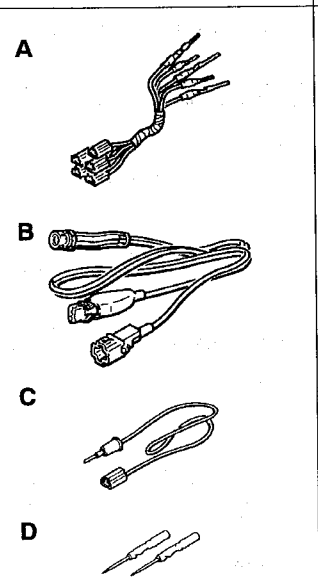	MB991223 A: MB991219 B: MB991220 C: MB991221 D: MB991222	Harness set A: Test harness B: LED harness C: LED harness adapter D: probe	Measurement of terminal voltage A: Connector pin contact pressure inspection B: Power circuit inspection C: Power circuit inspection D: Commercial tester connection

TROUBLESHOOTING

INSPECTION CHART FOR TROUBLE SYMPTOMS

Trouble symptoms	Inspection procedure No.	Reference page
Radiator fan and condenser fan do not operate. <Vehicles with A/C> Radiator fan does not operate. <Vehicles without A/C>	1	14-4
Radiator fan and condenser fan do not change speed or stop. <Vehicles with A/C> Radiator fan does not change speed or stop. <Vehicles without A/C>	2	14-6
Radiator fan does not operate. <Vehicles with A/C>	3	14-7
Condenser fan does not operate. <Vehicles with A/C>	4	14-7

INSPECTION PROCEDURE FOR TROUBLE SYMPTOMS

Inspection Procedure 1

Radiator fan and condenser fan do not operate. <Vehicles with A/C> Radiator fan does not operate. <Vehicles without A/C>	Probable cause
The cause could be a malfunction of the fan controller power supply or earth circuit. The cause could also be a malfunction of the fan controller or the engine-ECU.	• Malfunction of fusible link • Malfunction of fan control relay • Malfunction of fan controller • Malfunction of engine-ECU • Malfunction of wiring harness or connector

<Vehicles with A/C>

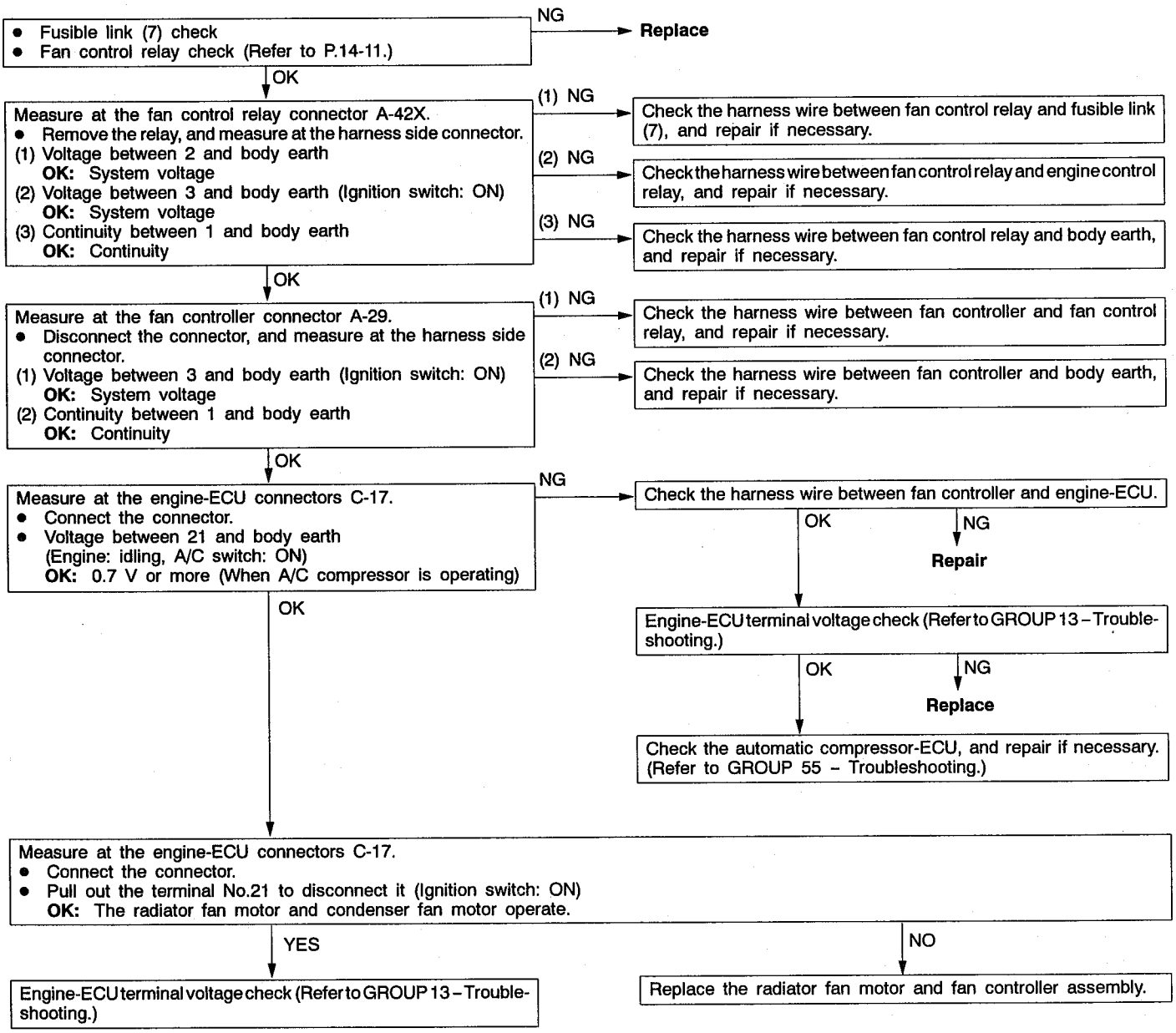

<Vehicles without A/C>

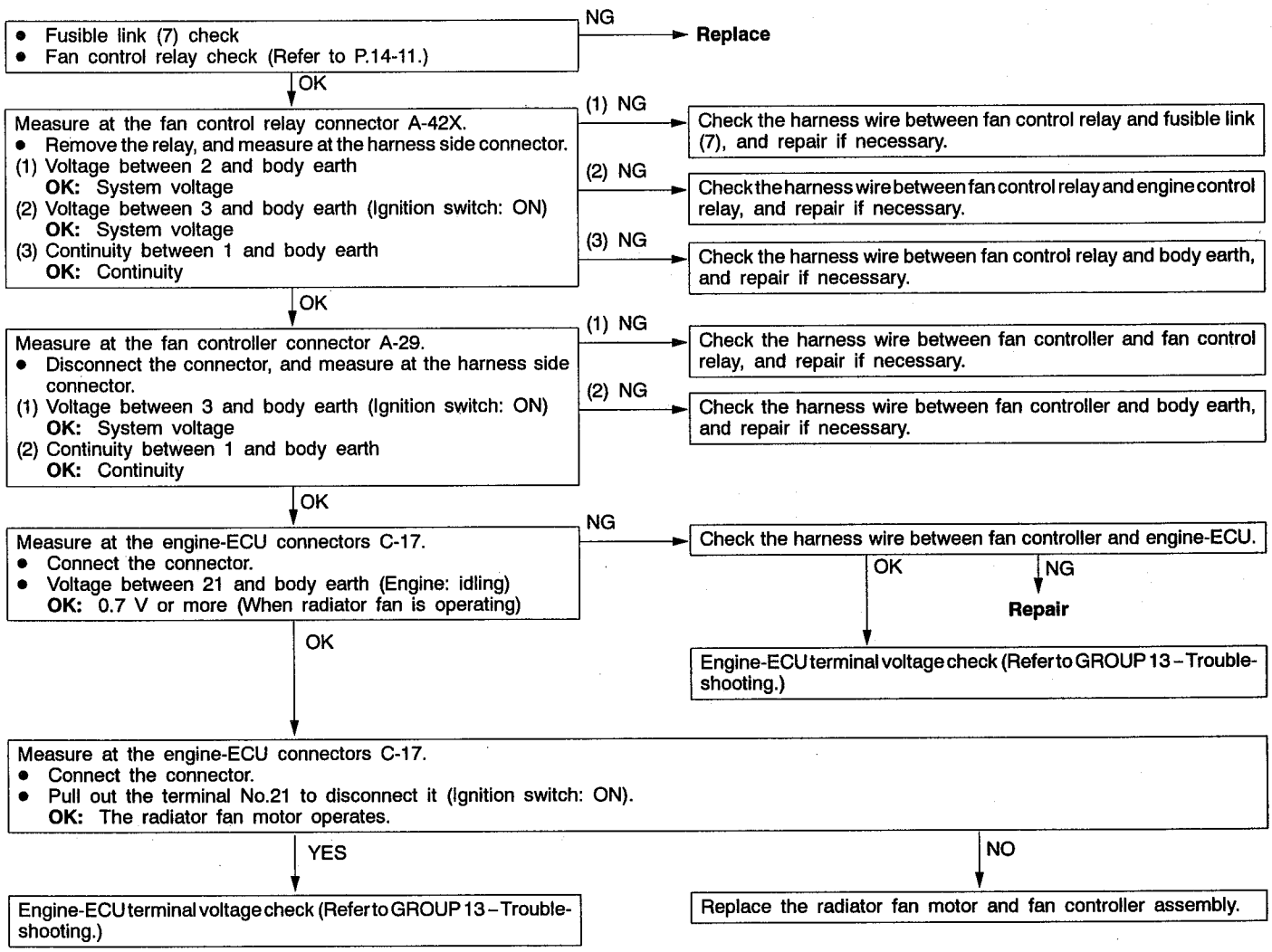

Inspection Procedure 2

Radiator fan and condenser fan do not change speed or stop. <Vehicles with A/C> Radiator fan does not change speed or stop. <Vehicles without A/C>	Probable cause
The fan controller carries out step-free control of the radiator fan motor and the condenser fan motor speeds using signals transmitted from the engine-ECU.	• Malfunction of fan control relay • Malfunction of fan controller • Malfunction of engine-ECU • Malfunction of wiring harness or connector

<Vehicles with A/C>

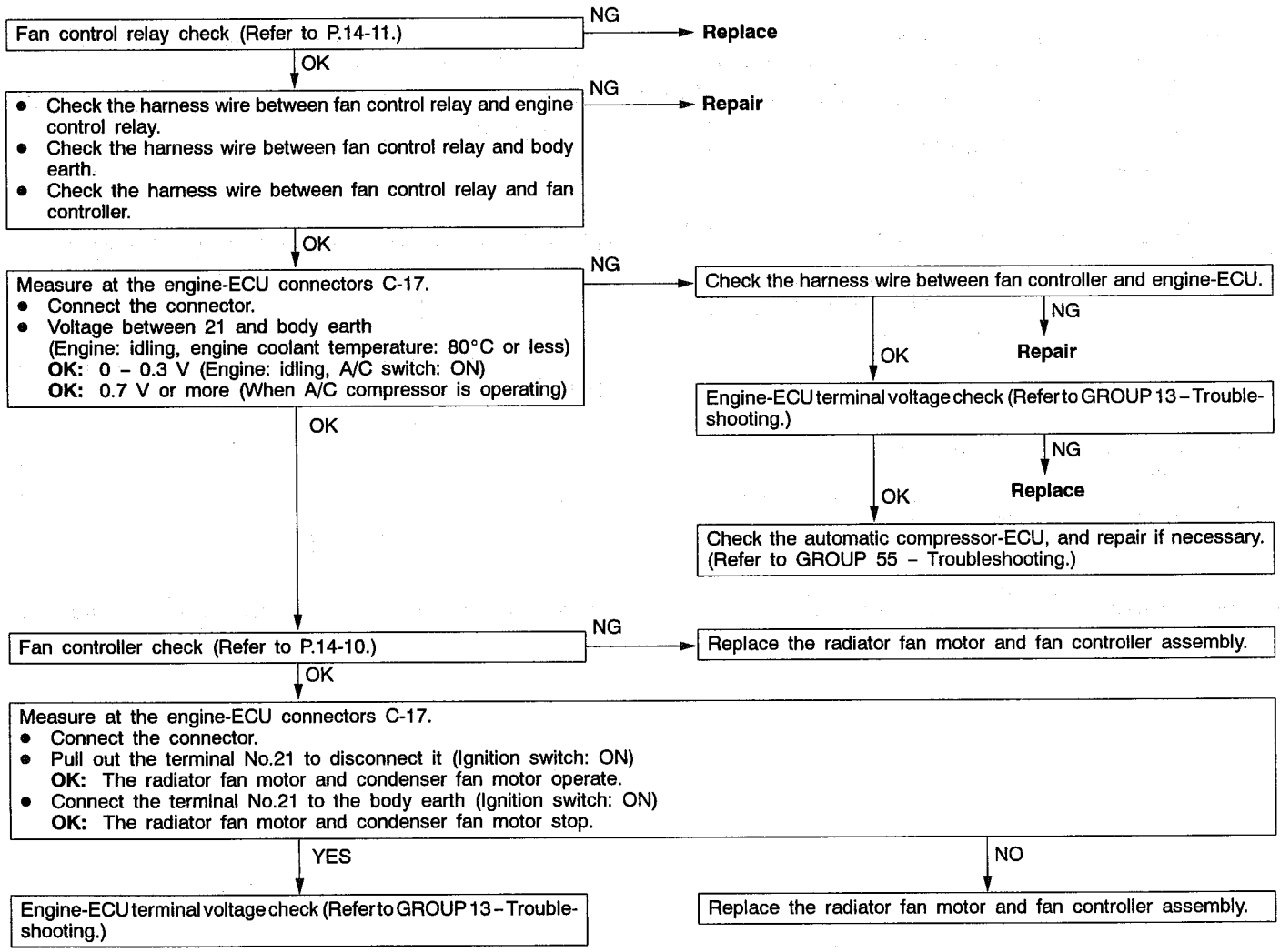

<Vehicles without A/C>

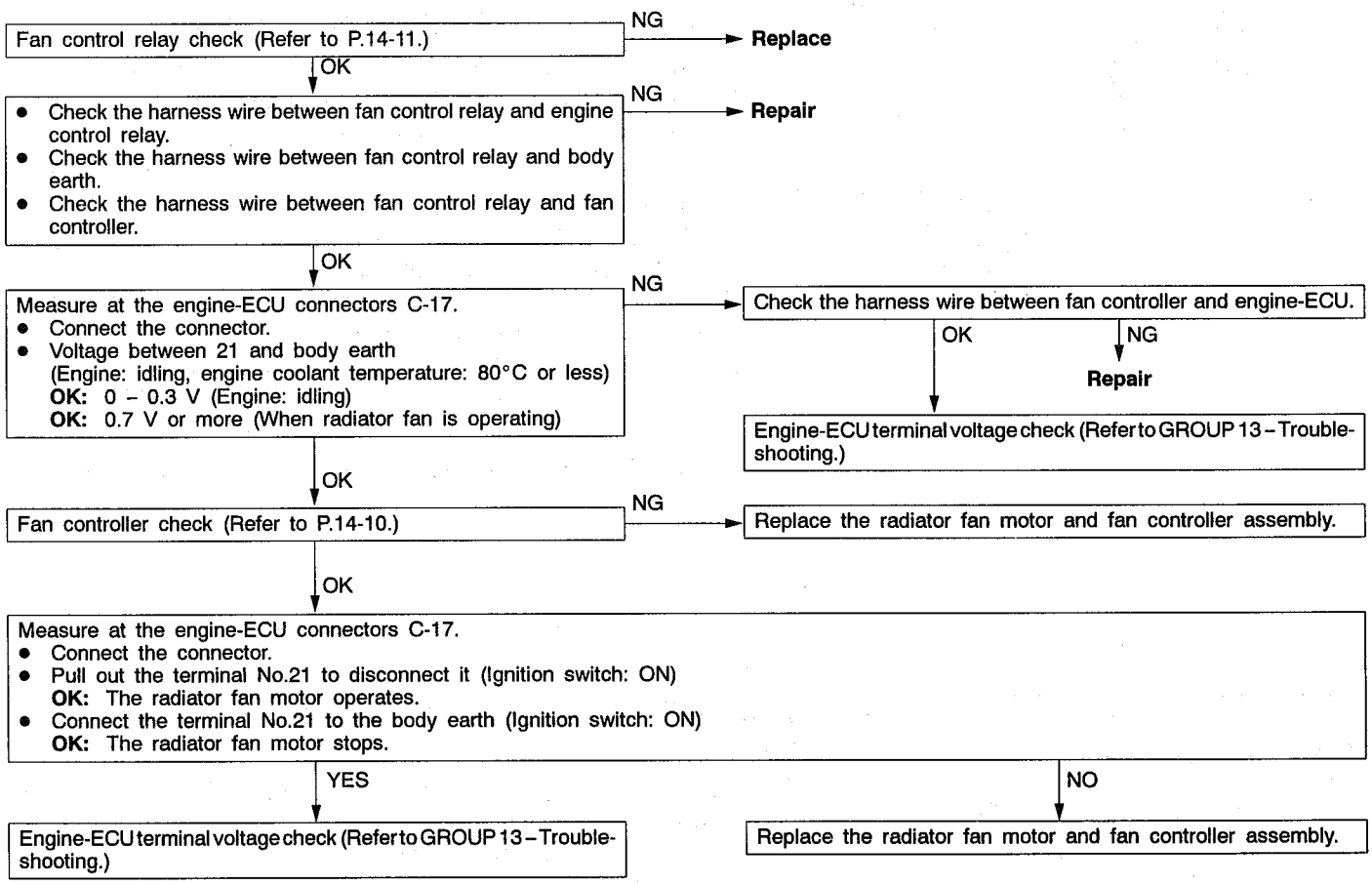

Inspection Procedure 3

Radiator fan does not operate. <Vehicles with A/C>	Probable cause
The cause could be a malfunction of the radiator fan motor or an open circuit between the fan controller and the radiator fan motor.	• Malfunction of radiator fan motor • Open circuit between fan controller and radiator fan motor

Replace the radiator fan motor and fan controller assembly.

Inspection Procedure 4

Condenser fan does not operate. <Vehicles with A/C>	Probable cause
The cause could be a malfunction of the condenser fan motor or of the fan controller.	• Malfunction of condenser fan motor • Malfunction of fan controller • Malfunction of wiring harness or connector

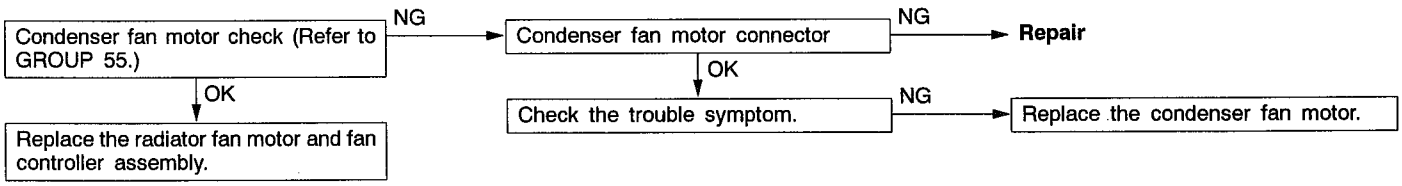

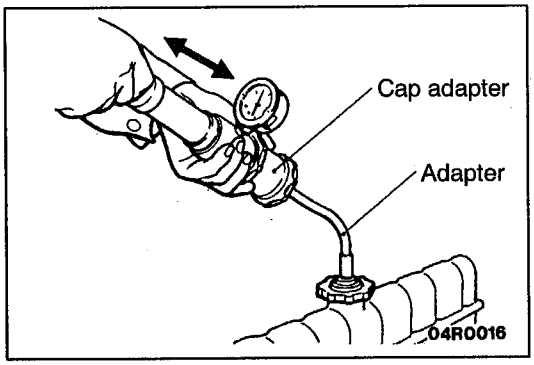

ON-VEHICLE SERVICE

ENGINE COOLANT LEAK CHECKING

1. Confirm that the coolant level is up to the filler neck. Install a radiator cap tester, adapter and cap adapter to the filler neck, and apply 160 kPa pressure, and then check for leakage from the radiator hose or connections.

   Caution
   (1) Be sure to completely clean away any moisture from the places checked.
   (2) When the tester is taken out, be careful not to spill any coolant from it.
   (3) Be careful, when installing and removing the tester and when testing, not to deform the radiator filler neck.

2. If there is leakage, repair or replace the appropriate part.

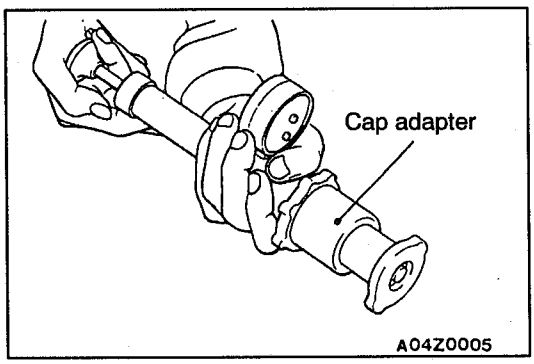

RADIATOR CAP VALVE OPENING PRESSURE CHECK

1. Use a cap adapter to attach the cap to the radiator cap tester.
2. Increase the pressure until the indicator of the gauge stops moving.

   Standard value: 75 – 105 kPa

   Limit: 65 kPa

3. Replace the radiator cap if the reading does not remain at or above the limit.

   NOTE
   Be sure that the cap is clean before testing, since rust or other foreign material on the cap seal will cause an improper indication.

<4G9>

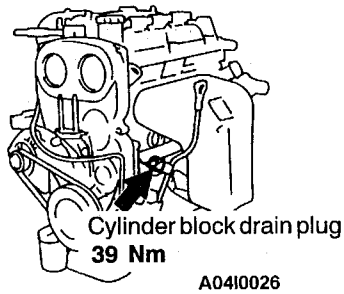

<4G1>

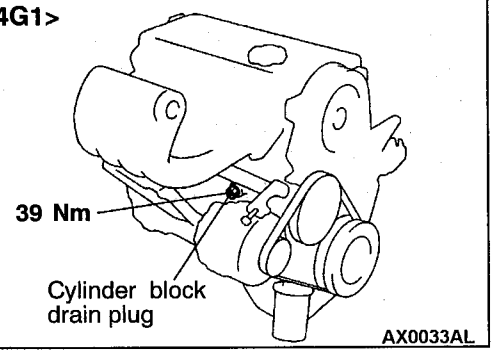

ENGINE COOLANT REPLACEMENT

1. Drain the engine coolant by removing the drain plug and then the radiator cap.
2. Remove the drain plug from the cylinder block to drain the engine coolant.
3. Remove the reserve tank to drain the engine coolant.
4. When the engine coolant has drained, pour in water from the radiator cap to clean the engine coolant line.
5. Coat the thread of the cylinder block drain plug with the specified sealant and tighten to the specified torque.

   Specified sealant:

   3M Nut Locking Part No. 4171 or equivalent
6. Securely tighten the radiator drain plug.
7. Install the reserve tank.
8. Slowly pour the engine coolant into the mouth of the radiator until the radiator is full, and pour also into the reserve tank up to the FULL line.

   Recommended antifreeze:

   MITSUBISHI GENUINE COOLANT or equivalent

   Quantity: 6 ℓ

   Caution
   Do not use alcohol or methanol anti-freeze or any engine coolants mixed with alcohol or methanol anti-freeze. The use of an improper anti-freeze can cause the corrosion of the aluminium components.
9. Install the radiator cap securely.
10. Start the engine and warm the engine until the thermostat opens. (Touch the radiator hose with your hand to check that warm water is flowing.)
11. After the thermostat opens, race the engine several times, and then stop the engine.
12. Cool down the engine, and then pour engine coolant into the reserve tank until the level reaches the FULL line. If the level is low, repeat the operation from step 11.

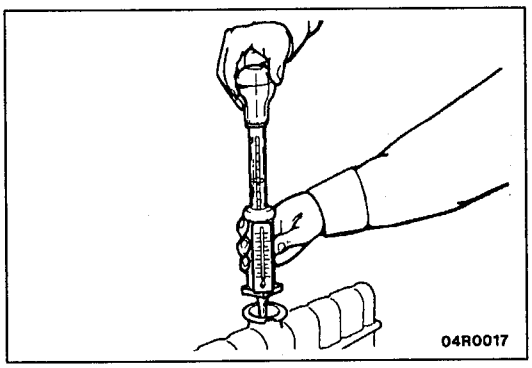

CONCENTRATION MEASUREMENT

Measure the temperature and specific gravity of the engine coolant to check the antifreeze concentration.

Standard value: 30–60% (allowable concentration range)

RECOMMENDED ANTIFREEZE

Antifreeze	Allowable concentration
MITSUBISHI GENUINE COOLANT or equivalent	30–60%

Caution
If the concentration of the antifreeze is below 30 %, the anti-corrosion property will be adversely affected. In addition, if the concentration is above 60 %, both the anti-freezing and engine cooling properties will decrease, affecting the engine adversely. For these reasons, be sure to maintain the concentration level within the specified range.

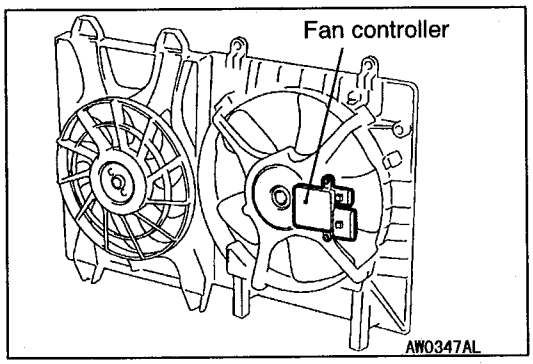

FAN CONTROLLER CHECK

1. Disconnect the condenser fan motor connector.
2. Start the engine and run it at idle.
3. Turn the A/C switch to ON and maintain the coolant temperature at 80°C or less.
4. When measuring the voltage between the fan controller-side connector terminals, check that the value changes repeatedly as indicated by (1) – (3) below.
   (1) 0 V
   (2) 8.2 ± 2.6 V
   (3) Battery voltage ± 2.6 V
5. If the voltage does not repeatedly change as indicated, replace the radiator fan motor and the fan controller assembly.

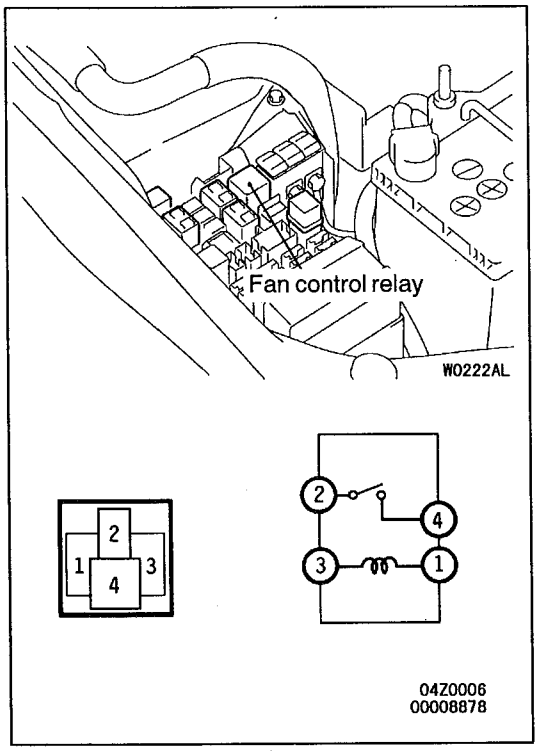

FAN CONTROL RELAY CONTINUITY CHECK

Battery voltage	Terminal No.			
	1	2	3	4
When current is not supplied	○		○	
When current is supplied	⊖	○	⊕	○

THERMOSTAT

REMOVAL AND INSTALLATION

Pre-removal and Post-installation Operation
- Engine Coolant Draining and Supplying (Refer to P.14-9.)
- Engine Cover and Under Cover Removal and Installation
- Air Cleaner Removal and Installation (Refer to GROUP 15.)

<4G9>

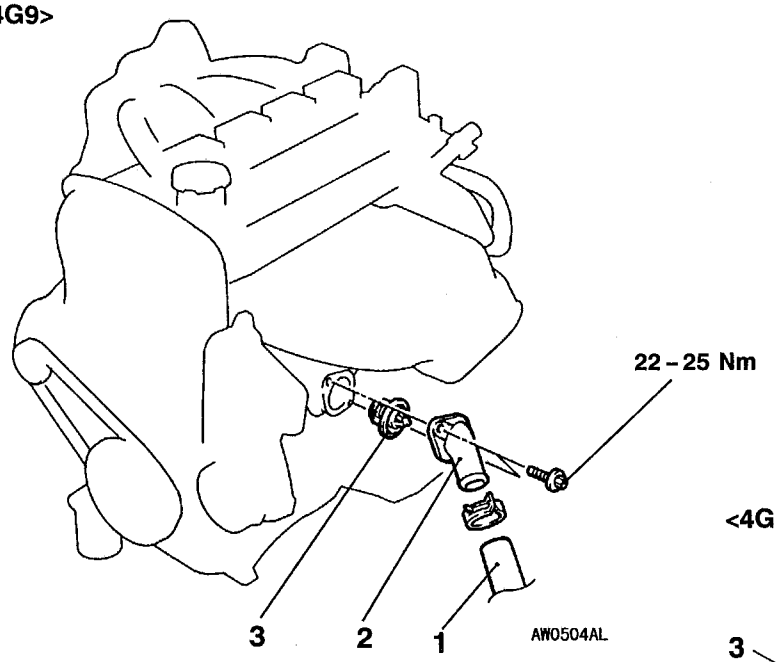

<4G1>

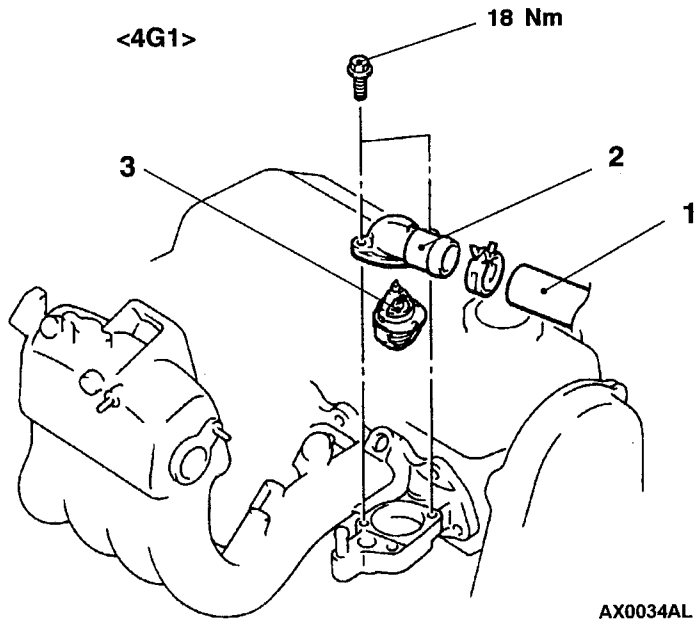

Removal steps

◀A▶ ▶B◀ 1. Radiator lower or upper hose connection
2. Water inlet or outlet fitting
▶A◀ 3. Thermostat

REMOVAL SERVICE POINT

◀A▶ RADIATOR LOWER OR UPPER HOSE DISCONNECTION

After making mating marks on the radiator hose and the hose clamp, disconnect the radiator hose.

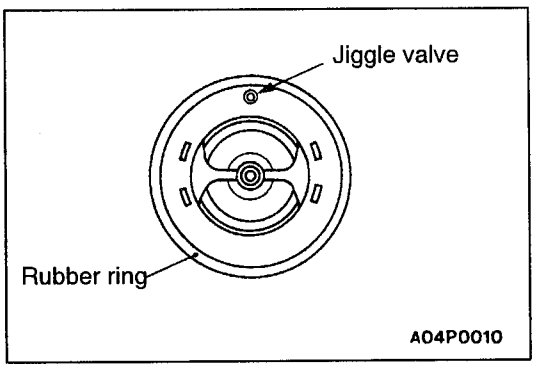

INSTALLATION SERVICE POINTS

▶A◀ THERMOSTAT INSTALLATION

Install the thermostat so that the jiggle valve is facing straight up.

Caution
Make absolutely sure that no oil is adhering to the rubber ring of the thermostat. In addition, be careful not to fold over or scratch the rubber ring when inserting. If the rubber ring is damaged, replace the thermostat.

▶B◀ RADIATOR LOWER OR UPPER HOSE CONNECTION

1. Insert each hose as far as the projection of the water inlet fitting.
2. Align the mating marks on the radiator hose and hose clamp, and then connect the radiator hose.

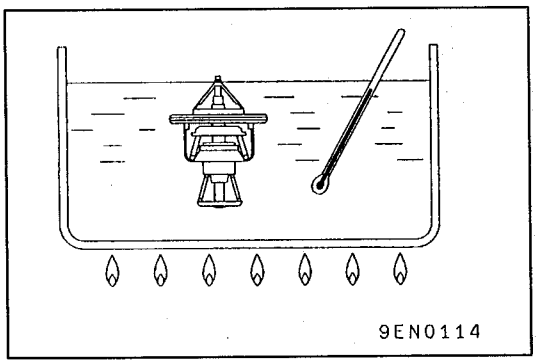

INSPECTION

THERMOSTAT CHECK

1. Immerse the thermostat in water, and heat the water while stirring. Check the thermostat valve opening temperature.

   Standard value:
   Valve opening temperature:
   <4G9> 85±1.5°C
   <4G1> 88±1.5°C

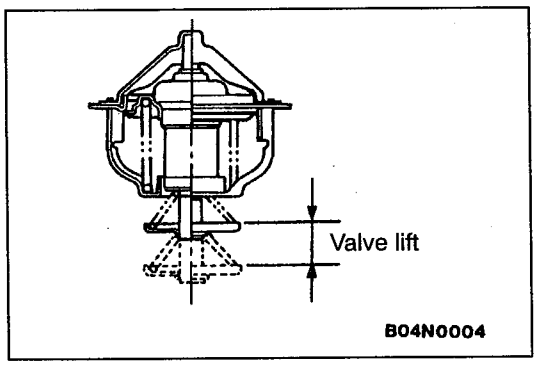

2. Check that the amount of valve lift is at the standard value when the water is at the full-opening temperature.

   Standard value:
   Full-opening temperature:
   <4G9> 98°C
   <4G1> 100°C
   Amount of valve lift:
   <4G9> 8.5 mm or more
   <4G1> 8.0 mm or more

   NOTE
   Measure the valve height when the thermostat is fully closed, and use this measurement to calculate the valve height when the thermostat is fully open.

WATER PUMP

REMOVAL AND INSTALLATION

<4G9>

Pre-removal and Post-installation Operation
- Engine Coolant Draining and Supplying (Refer to P.14-9.)
- Timing Belt Removal and Installation (Refer to GROUP 11.)
- Idler Pulley Removal and Installation <GDI> (Refer to GROUP 11A.)

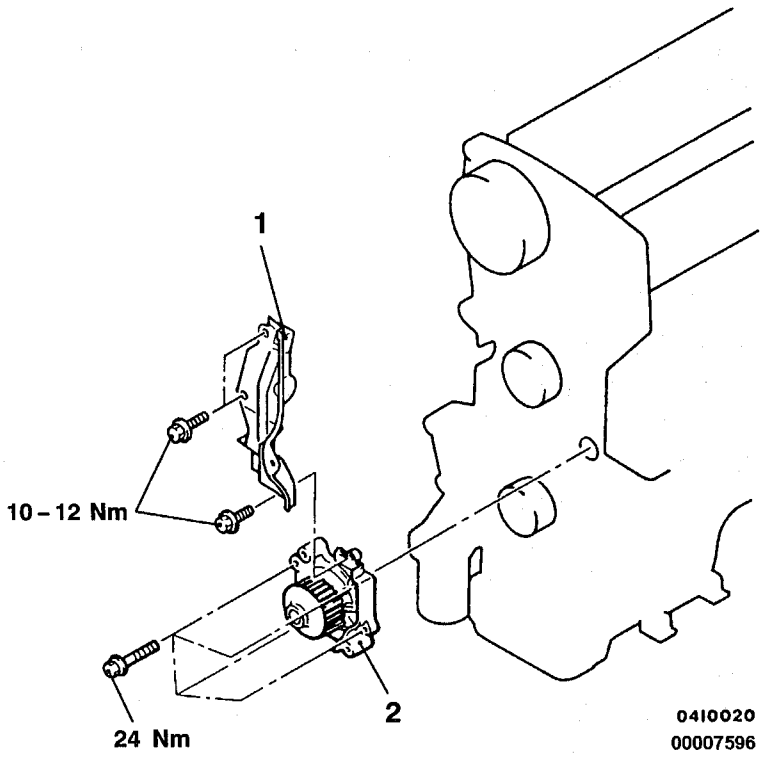

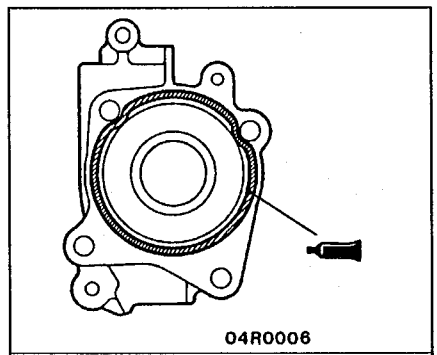

Sealant:
Mitsubishi Genuine Part No. MD970389 or equivalent

Removal steps

1. Timing belt rear cover
▶A◀ 2. Water pump

<4G1>

Pre-removal and Post-installation Operation
- Engine Coolant Draining and Supplying (Refer to P.14-9.)
- Timing Belt Removal and Installation (Refer to GROUP 11B.)

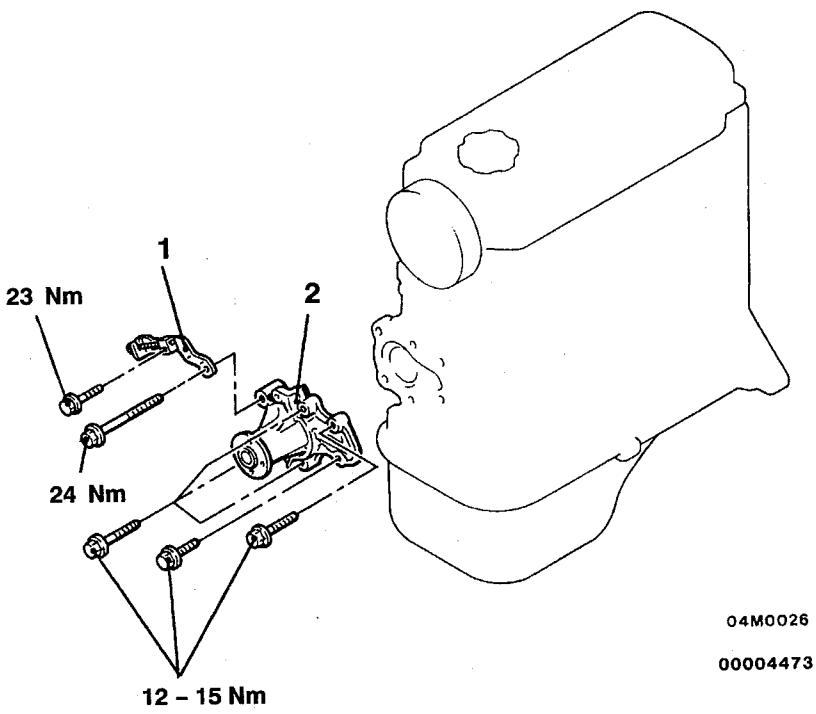

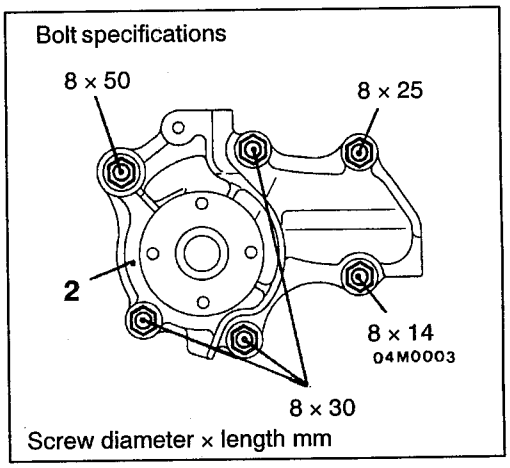

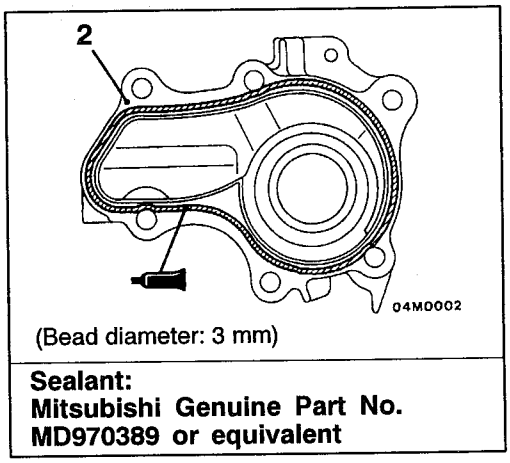

Removal steps
1. Alternator brace
▶A◀ 2. Water pump

INSTALLATION SERVICE POINT

▶A◀ WATER PUMP INSTALLATION

Squeeze out the sealant from the tube evenly and apply it so that there is not too much sealant and no places without sealant.

Specified Sealant:

Mitsubishi Genuine Parts No. MD970389 or equivalent

WATER HOSE AND WATER PIPE

REMOVAL AND INSTALLATION

<4G9>

Pre-removal and Post-installation Operation
- Engine Coolant Draining and Suppling (Refer to P.14-9.)
- Engine Cover Removal and Installation <GDI>
- Air Cleaner Removal and Installation (Refer to GROUP 15.)
- Exhaust Manifold Removal and Installation (Refer to GROUP 15.)

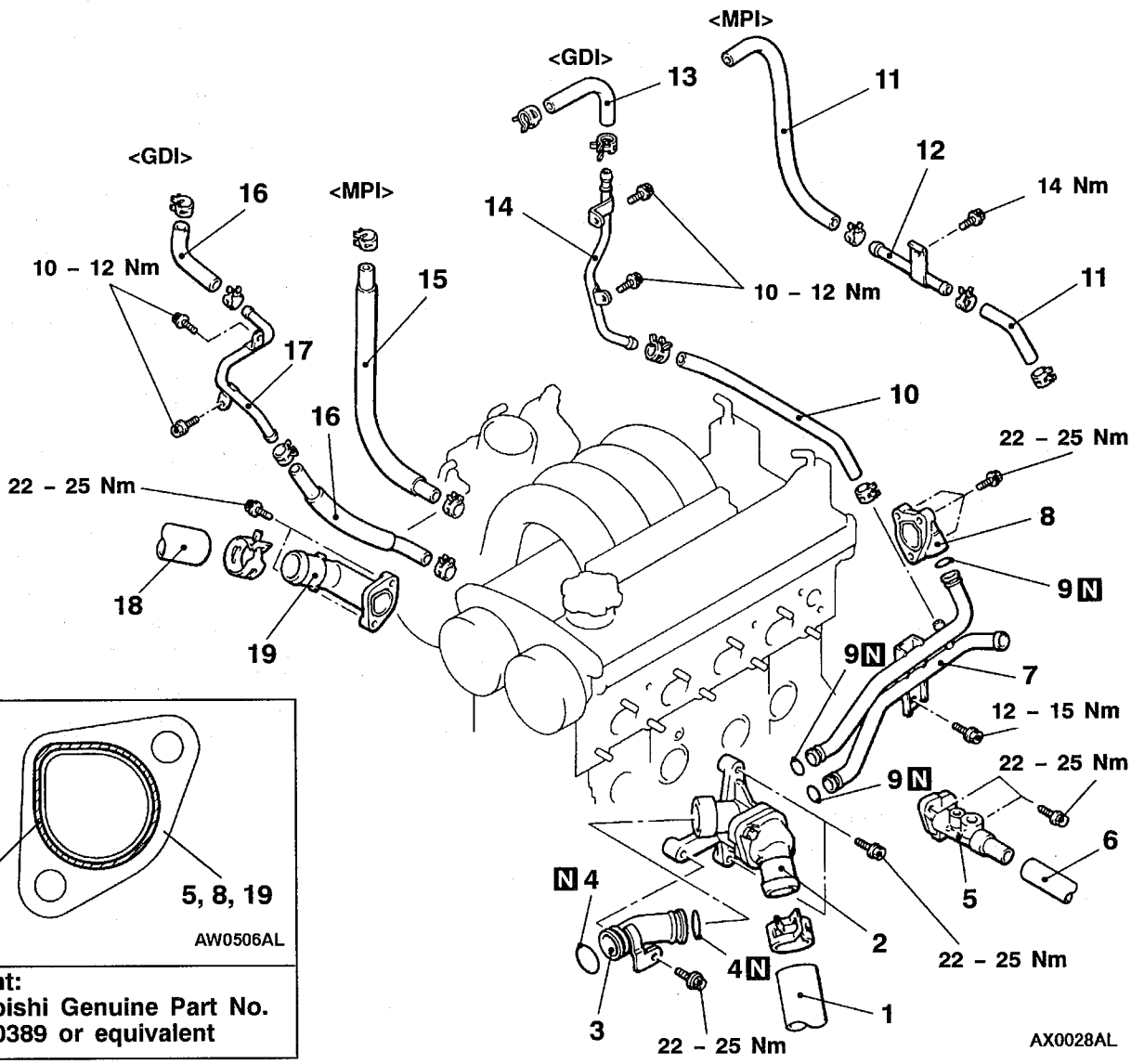

Sealant:
Mitsubishi Genuine Part No. MD970389 or equivalent

Removal steps

◀A▶ ▶B◀ 1. Radiator lower hose connection
2. Thermostat case assembly
3. Water pipe
▶C◀ 4. O-ring
5. Water fitting
6. Heater hose connection
7. Water pipe assembly
▶A◀ 8. Water by-pass fitting
▶C◀ 9. O-ring
- EGR valve <GDI> (Refer to GROUP 17.)

10. Water hose <GDI>
11. Water hose <MPI>
12. Water pipe <MPI>
13. Water hose <GDI>
14. Water pipe <GDI>
15. Water hose <MPI>
16. Water hose <GDI>
17. Water pipe <GDI>
▶B◀ 18. Radiator upper hose connection
▶A◀ 19. Water outlet fitting

<4G1>

Pre-removal and Post-installation Operation
- Engine Coolant Draining and Supplying (Refer to P.14-9.)
- Air Cleaner Removal and Installation (Refer to GROUP 15.)

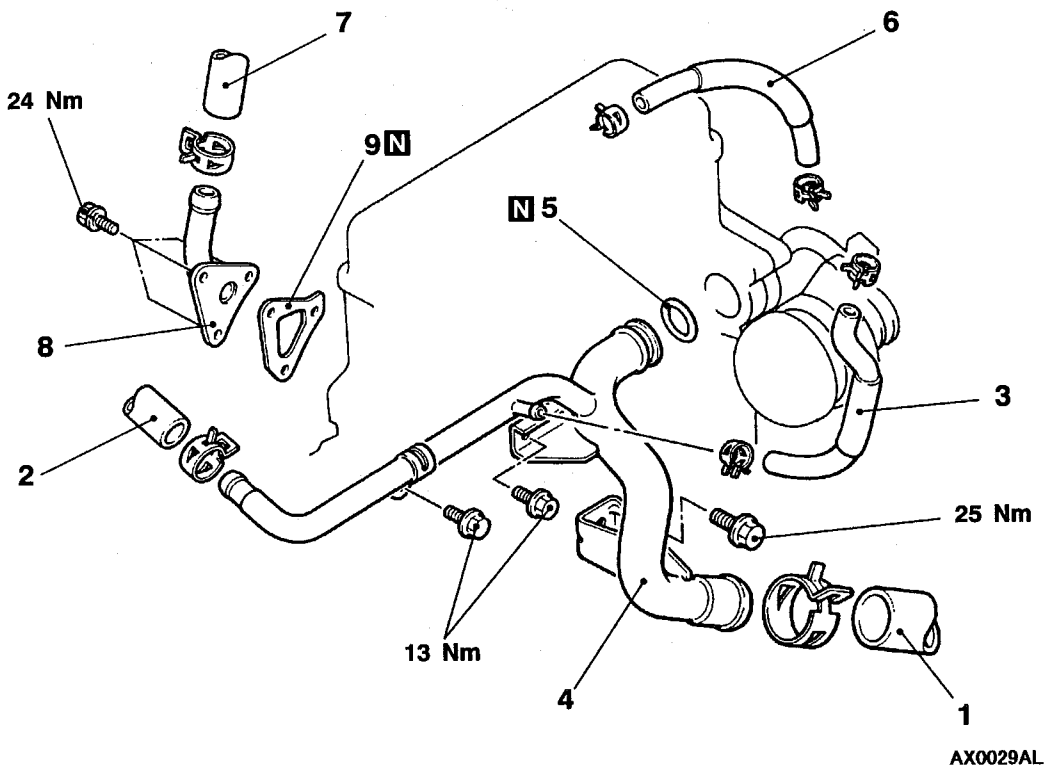

Removal steps

◀A▶ ▶B◀ 1. Radiator lower hose connection
2. Heater hose connection
3. Water hose
4. Water inlet pipe
▶C◀ 5. O-ring
6. Water hose
7. Heater hose connection
8. Fitting
9. Gasket

REMOVAL SERVICE POINT

◀A▶ RADIATOR UPPER HOSE/RADIATOR LOWER HOSE DISCONNECTION

After making mating marks on the radiator hose and the hose clamp, disconnect the radiator hose.

INSTALLATION SERVICE POINTS

▶A◀ WATER OUTLET FITTING/WATER BY-PASS FITTING/WATER FITTING INSTALLATION

1. Use a gasket scraper or wire brush to eliminate completely foreign materials adhered to the gasket surface.
2. Apply the specified sealant continuously.

   Specified sealant:
   Mitsubishi Genuine Parts No. MD970389 or equivalent
3. Install the water fitting, water bypass fitting and the water outlet fitting while the sealant is wet (within 15 minutes after applying the sealant). Do not apply sealant to the positions other than the required.

▶B◀ RADIATOR UPPER HOSE/RADIATOR LOWER HOSE CONNECTION

1. Insert each hose as far as the projection of the water inlet fitting.
2. Align the mating marks on the radiator hose and hose clamp, and then connect the radiator hose.

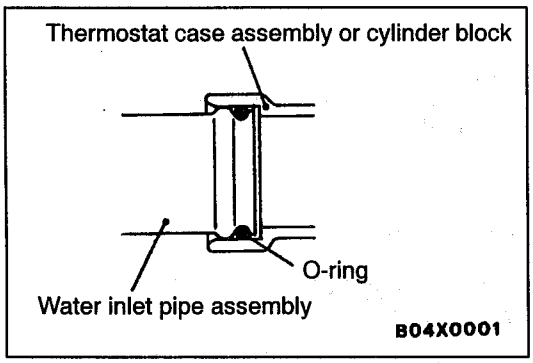

▶C◀ O-RING INSTALLATION

Insert the O-ring to the water inlet pipe assembly, and coat the outer circumference of the O-ring with water or engine coolant.

Caution
Do not allow engine oil or other greases to adhere to the O-ring

INSPECTION

WATER PIPE AND HOSE CHECK

Check the water pipe and hose for cracks, damage, clog and replace them if necessary.

RADIATOR

REMOVAL AND INSTALLATION

Pre-removal Operations
- Engine Coolant Draining (Refer to P.14-9.)
- Engine Cover and Under Cover Removal
- Air Cleaner Removal (Refer to GROUP 15.)

Post-installation Operations
- Air Cleaner Installation (Refer to GROUP 15.)
- Engine cover and Under Cover Installation
- Engine Coolant Supplying (Refer to P.14-9.)
- A/T Fluid Supplying (Refer to GROUP 23 – On-vehicle Service.)

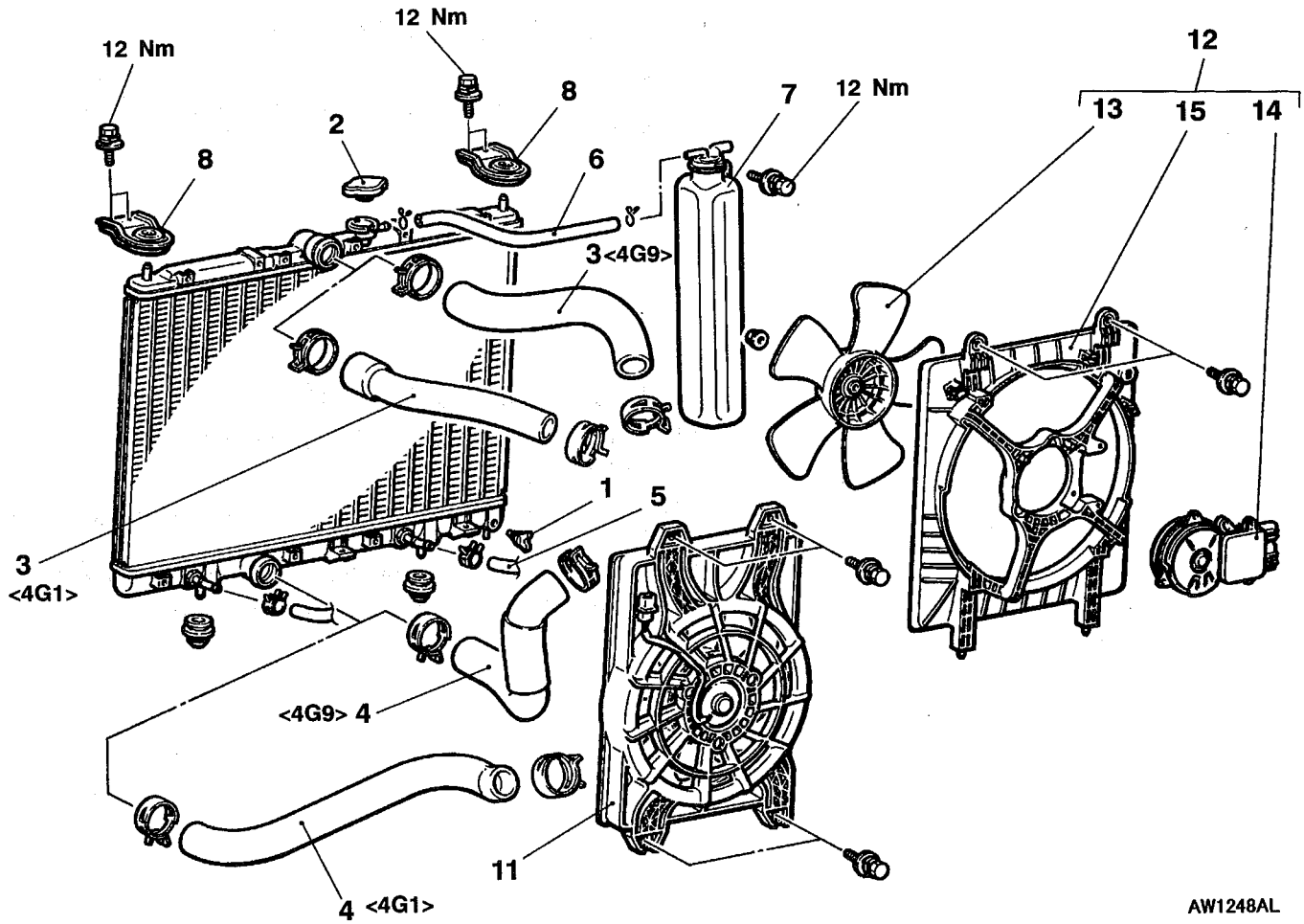

Radiator removal steps

◀A▶ ▶A◀ 3. Radiator upper hose
◀A▶ ▶A◀ 4. Radiator lower hose
◀B▶ 5. A/T oil cooler hose connection
6. Overflow hose
7. Reserve tank
8. Upper insulator
9. Radiator assembly
10. Condenser fan motor assembly
11. Radiator fan motor assembly
12. Lower insulator

Radiator fan motor, fan controller assembly removal steps

11. Radiator fan motor assembly
13. Fan
14. Radiator fan motor and fan controller assembly
15. Shroud

REMOVAL SERVICE POINTS

◀A▶ RADIATOR UPPER HOSE/RADIATOR LOWER HOSE DISCONNECTION

After making mating marks on the radiator hose and the hose clamp, disconnect the radiator hose.

◀B▶ A/T OIL COOLER HOSE REMOVAL

After removing the hose from the radiator, plug the hose and the radiator nipple to prevent dust or foreign particles from getting in.

INSTALLATION SERVICE POINT

▶A◀ RADIATOR LOWER HOSE/RADIATOR UPPER HOSE CONNECTION

1. Insert each hose as far as the projection of the water inlet fitting.
2. Align the mating marks on the radiator hose and hose clamp, and then connect the radiator hose.